4W 2-Bulb Mini Grid Light

Datasheet

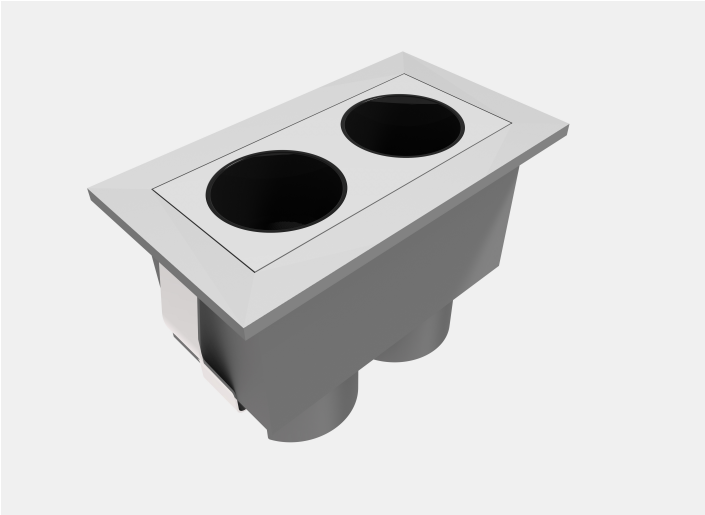

HD-TH5002F

Please scan the QR code above to check the latest version of datasheet!

Before using this product, please read this datasheet carefully and keep it properly!

Document Version：C

◇◆ Overview

4W 2-Bulb Mini Grid Light is a flicker-free LED light with constant current. The housing material is aluminum alloy and has a novel structure.

Mainly suitable for indoor places such as hotels, luxury homes, clubs, model rooms, sales offices, museums, restaurants, shopping malls, shops, etc. that require special lighting.

Main functions:

- 2-Bulb Mini Grid Light Inset with ON-OFF;
- White painted finish (RAL 9016) and black reflector;
- LED 2W;
- Measurement 31.1mm x 31.1mm; height of the profile inset 36.3mm;
- High color rendering at an index of CRI90;
- After a lifetime of 50000h min. 80% of the luminous flux;
- Precise beam characteristic with 15°/24°/36° beam angles;
- Lighting perfectly suitable for reading, writing as well as computer and control work according to DIN EN 12464-1 (UGR<15);
- Degree of housing protection according to DIN EN 60529 (IP20).

Note: Please note that the pictures and illustrations provided in this instruction manual are for reference purposes only, and the actual product may differ.

◇◆ Appearance

Figure 1

◇◆ Technical Data

Item	Parameter

LED	
Color temperature	2700K/3000K/3500K/4000K/5000K
CRI	>90
L80B10 lifetime	50,000h
SDCM	3
Optics	
CCT light beam angle	15°/24°/36°
UGR	<15
System output	240lm
Power supply parameters	
LED driver	ON-OFF driver
LED power	4W
Rated voltage	6V
Rated current	600mA

Light distribution

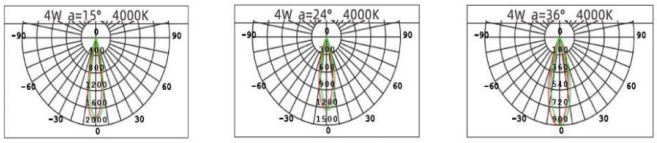

4W 15° 310lm

Lux

h(m)	d(m)	Em	Emax
1	0.38	1320	1832
2	0.76	330.1	457.9
3	1.15	146.7	203.5
4	1.53	82.53	114.5
5	1.92	52.82	73.27

4W 24° 279lm

Lux

h(m)	d(m)	Em	Emax
1	0.46	843	1238
2	0.92	210.8	309.6
3	1.38	93.67	137.6
4	1.84	52.69	77.4
5	2.30	33.72	49.54

4W 36° 269lm

Lux

h(m)	d(m)	Em	Emax
1	0.52	600.1	896.8
2	1.04	150	224.2
3	1.56	66.67	99.64
4	2.08	37.5	56.05
5	2.60	24	35.87

Figure 2-Light Distribution

Note: The technical data represent rated values for an ambient temperature of 25°C. The data values for the luminous flux are initially subject to a tolerance of +/- 10%, those for the electrical connected load are initially subject to a tolerance of +/- 10%, and those for the colour temperature are initially subject to a tolerance of +/- 150 K. No liability is assumed for typographical or printing errors.

◇◆ Specifications

Item	Parameter
Dimensions	55.3mm x 31.5mm
Cutout	51mm x 26mm
Height	38.3mm
Installation site	Indoor
Light type	Grid light

Installation	Recessed
Version	Rectangle
Housing	White
Reflector	Black
IP degree (compliant with EN 60529)	IP20

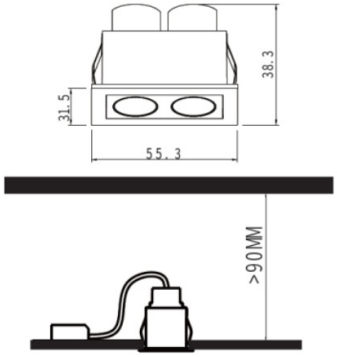

Figure 3

◇◆ Safety Precaution

Danger:

- Please do not privately disassemble or replace any parts of the product. Otherwise, it may cause mechanical fault, electric shock, fire or personal injuries.
- Under no circumstances should the product be covered by insulation pads or similar materials.

Warning:

- The installation and testing for the product must be carried out by HDL Automation Co., Ltd. (hereinafter referred to as HDL) or its appointed service agencies. The electric construction shall comply with local laws and safety regulations.
- HDL will not be responsible for any consequence caused by the inexpert or faulty installation and wiring methods, which are not in accordance with the instructions contained in this datasheet.
- Please contact HDL after-sales departments or our designated service agencies for your maintenance service. Product failures caused by private disassembly are not subject to the warranty.

Caution:

- Before performing any installation or disassembly procedures on the device, it is crucial to disconnect the device from all voltage sources. This step is necessary to ensure the safety of the technician and prevent any potential damage to the device.
- Do not use corrosive liquid to wipe the device body, especially the interface, so to avoid damage to the device. Do not wipe the device with a damp cloth.
- Before performing any maintenance or cleaning procedures on the device, it is imperative to disconnect the device from

all voltage sources. This precautionary measure is necessary in order to prevent electric leakage and the risk of electric shock.

- After all of the cables are terminated, check for correct and good terminations.
- Overrange is not allowed. Please use the device in accordance with the technical specifications.

Note:

- The use of this product must not violate any safety regulations, and the product must be 800mm away from the illuminated object.
- Ensure that this product is securely fastened to the surface of the installed object and not installed on ceilings that are easily damaged or deformed.
- In order to extend the service life and maintain the best lighting effect, it is recommended to regularly clean and maintain the product.

◇◆ Installation

Warning: Before performing any installation or disassembly procedures on the device, it is crucial to disconnect the device from all voltage sources. This step is necessary to ensure the safety of the technician and prevent any potential damage to the device.

The following is the installation method for the recessed grid light:

Step 1: Make a hole in the ceiling according to the opening dimension;

Step 2: Before connecting the wires, ensure that the power is turned off and connect the mains power to the live wire and neutral wire input terminal. If there is intelligent control, connect the signal wire;

Step 3: Remove the cover inside the light;

Step 4: Fix the light to the ceiling by rotating the screws;

Step 5: Place the removed anti glare cover inside the lamp;

Step 6: Before powering on, please ensure that the wiring is correct and that the product will not loosen.

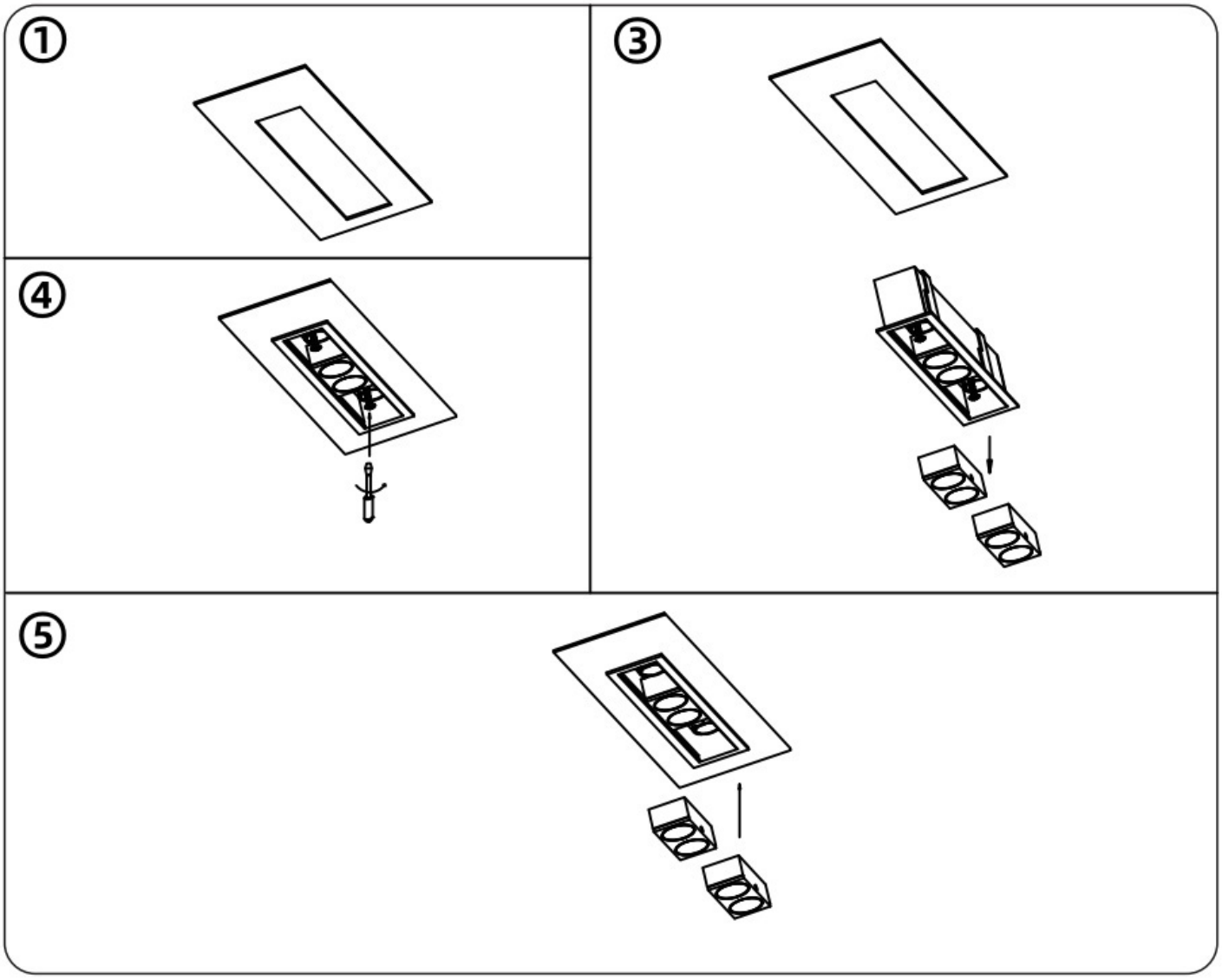

Figure 4

◇◆ Disassembly

WARNING: Before disassembling, please cut off the power supply, and operation with electricity is prohibited.

◇◆ Packing List

- Grid light*1
- Driver*1

Note: After unpacking, please check if the product and the parts are complete.

◇◆ Copyright Statement

HDL has all the intellectual property rights to this document and contents thereof. Reproduction or distribution for third parties are prohibited without written authorization from HDL. Any infringement of HDL's intellectual property rights will be investigated the legal liability.

The contents of this document will be updated as the updates of product versions or other reasons. Unless otherwise agreed upon, this document is to be used as a guidance only. All the statements, information and recommendations in this document makes no warranty expressed or implied.

© 2025 HDL Automation Co., Ltd. All rights reserved.

Update History:

The form below contains the information of every update. The latest version contains all the updates of all former versions.

Version	Update Information	Date
V1.0	Initial release	August 15, 2025

◇◆ Technical Support

E-mail: hdltickets@hdlautomation.com

Website: https://www.hdlautomation.com